CHARIOT: A DOMAIN SPECIFIC LANGUAGE FOR EXTENSIBLE CYBER-PHYSICAL SYSTEMS

Presented at DSM 2015, Pittsburgh, PA

Subhav Pradhan, *Abhishek Dubey,*
Aniruddha Gokhale, and Martin Lehofer
subhav.m.pradhan@vanderbilt.edu

Institute for Software Integrated Systems
Department of Electrical Engineering and Computer Science
Vanderbilt University, Nashville, TN, USA

This work was supported in part by research grant from
Siemens Corporate Technology

Extensible System Evolution

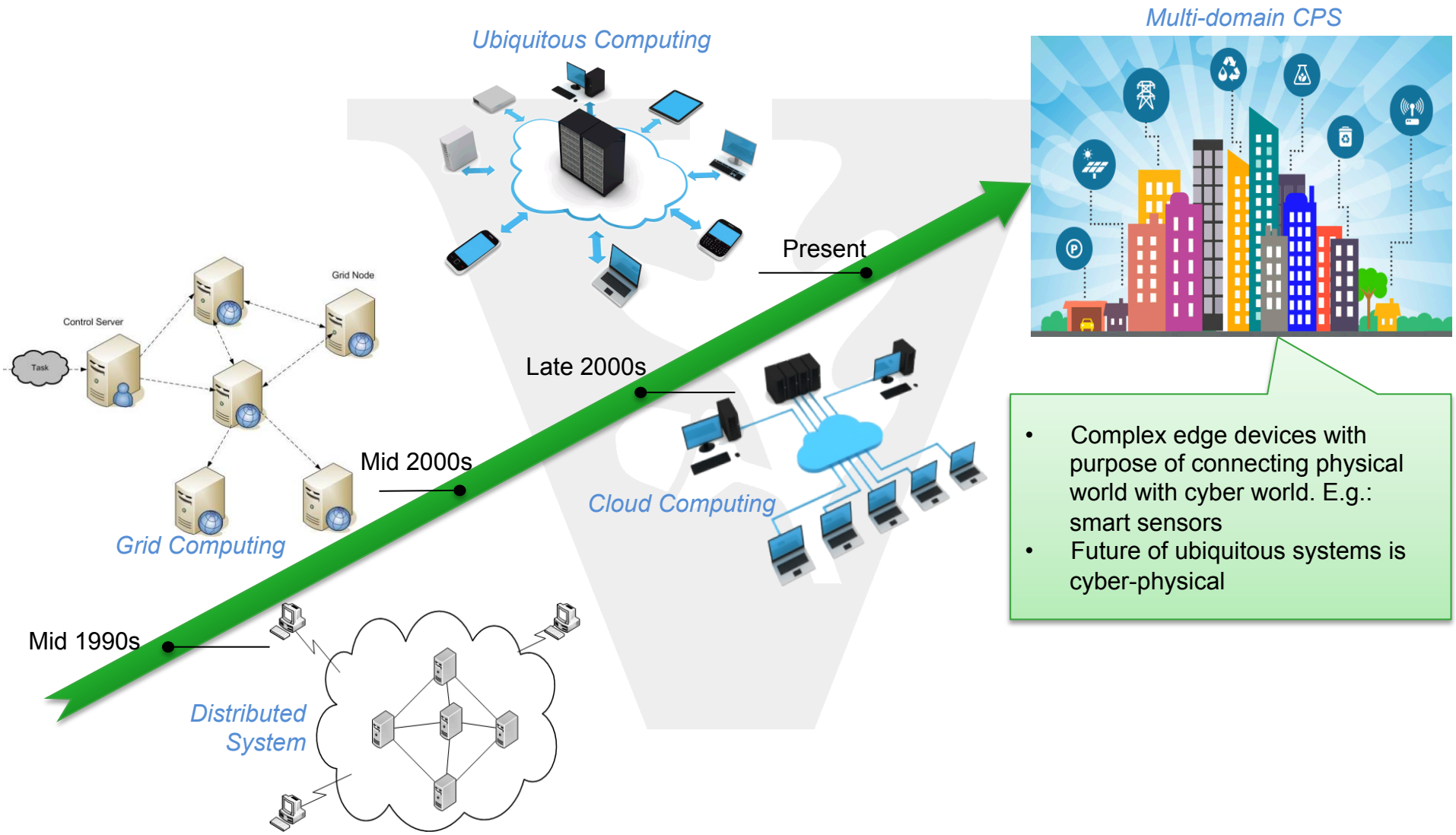

- Complex edge devices with purpose of connecting physical world with cyber world. E.g.: smart sensors
- Future of ubiquitous systems is cyber-physical

Extensible CPS

- What are CPS?
  - Integration of cyber (computation, communication) and physical components
  - Cyber components use sensors and actuators as interfaces to monitor and control physical environments
  - Traditionally, designed as static, single purpose systems

- What are Extensible CPS?
  - Collection of loosely connected cyber-physical (sub)-systems, from possibly different physical domains, that provide an open platform to host dynamic applications
    - E.g.: Smart city applications such as smart emergency response system, cluster of fractionated spacecraft providing *cluster-as-a-service* in space
  - Shared resources (Computation, communication, sensors, actuators)
  - Application lifecycle independent of underlying system

Lifecycle of Extensible CPS

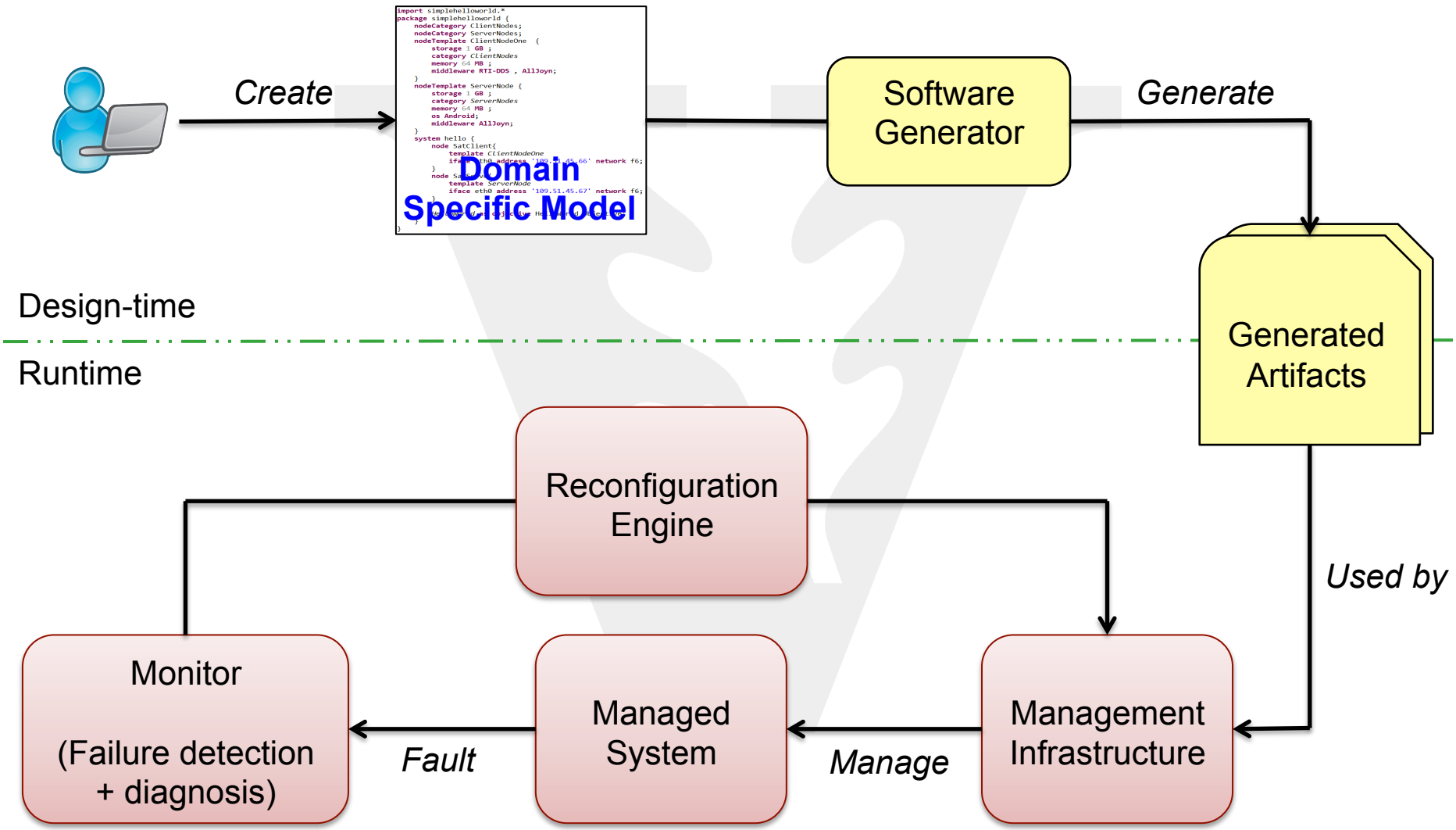

Properties and Challenges

Property
Multi-tenant
Dynamic
Remotely deployed
Heterogeneous
Resilient (*Desired property*)

Design-time Challenges

Runtime Challenges

<u>Challenge 1</u>: Modeling heterogeneous (i.e., middleware agnostic) applications to achieve maximum interoperability

<u>Challenge 2</u>: Modeling resilience criteria/logic and patterns at design time

CHARIOT DSL Concepts

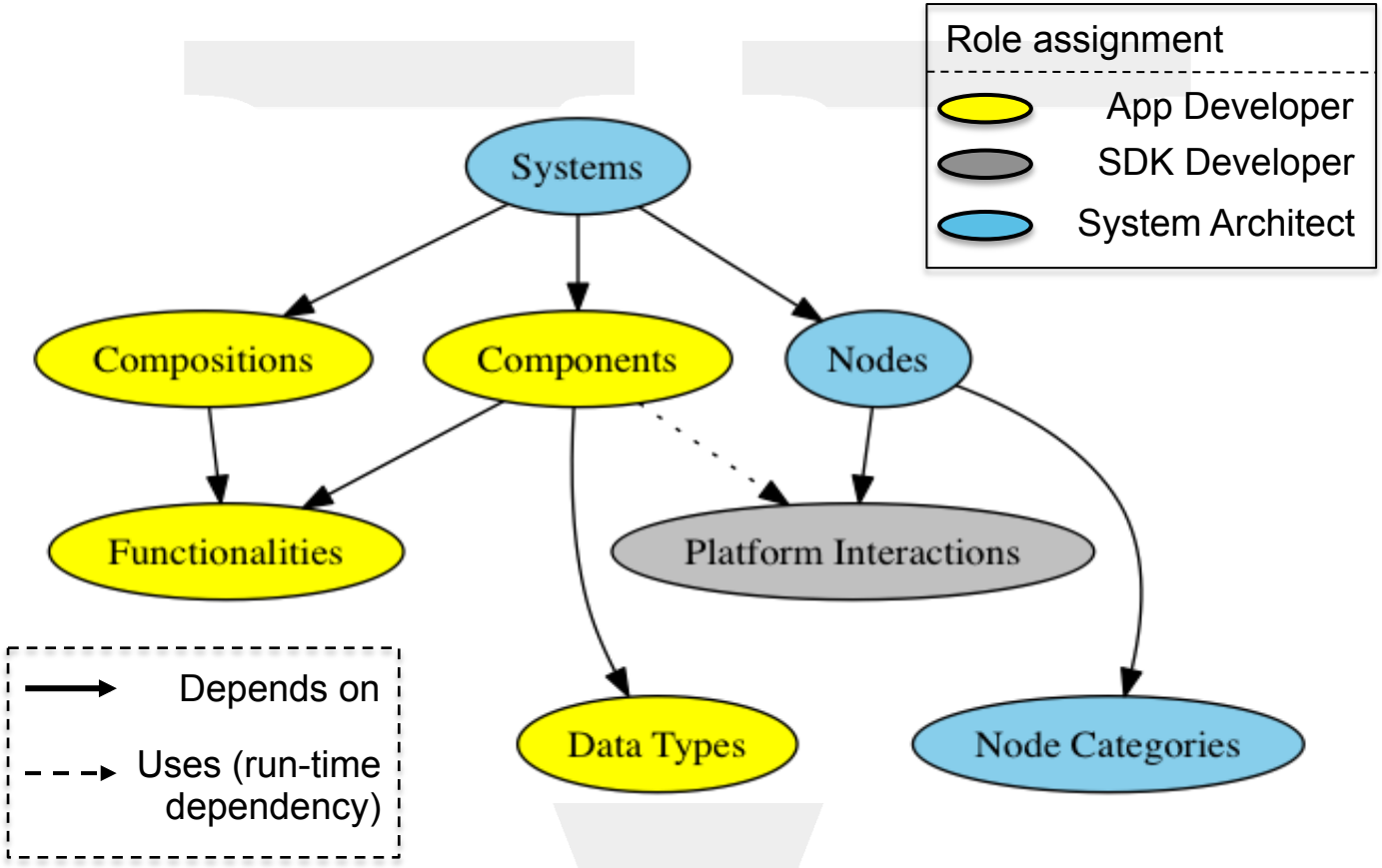

Middleware Agnostic Applications

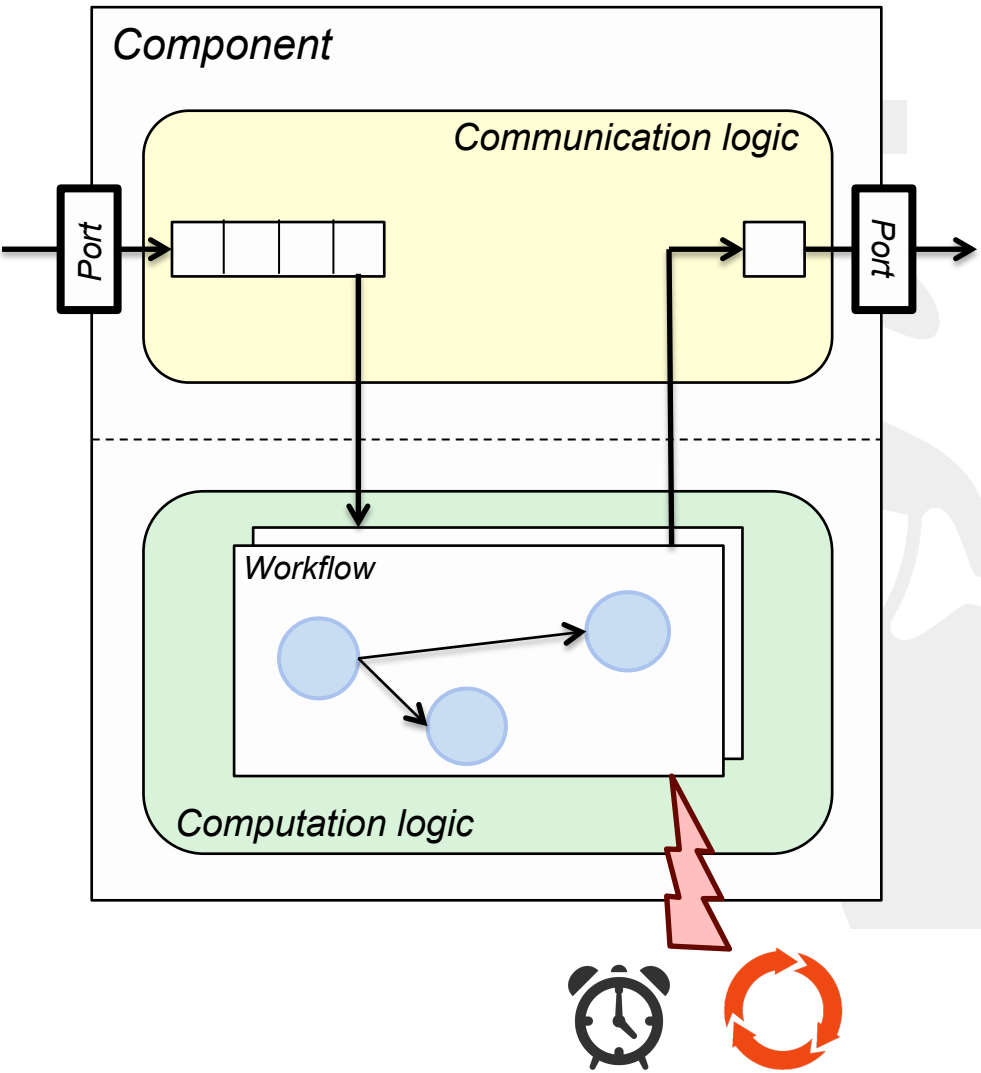

- Follow generic component model that isn't tightly coupled with any middleware solution
- Clean separation-of-concerns between communication and computation logic
- Communications modeled using common interaction patterns via different ports
  - Client/Sever
  - Buffered, Sampling receiver
  - Sender
- Event-driven computation logic
  - Timers, Lifecycle events
  - External (message) events
    - Triggers based on state of common ports and not middleware specific callbacks

Runtime Mapping

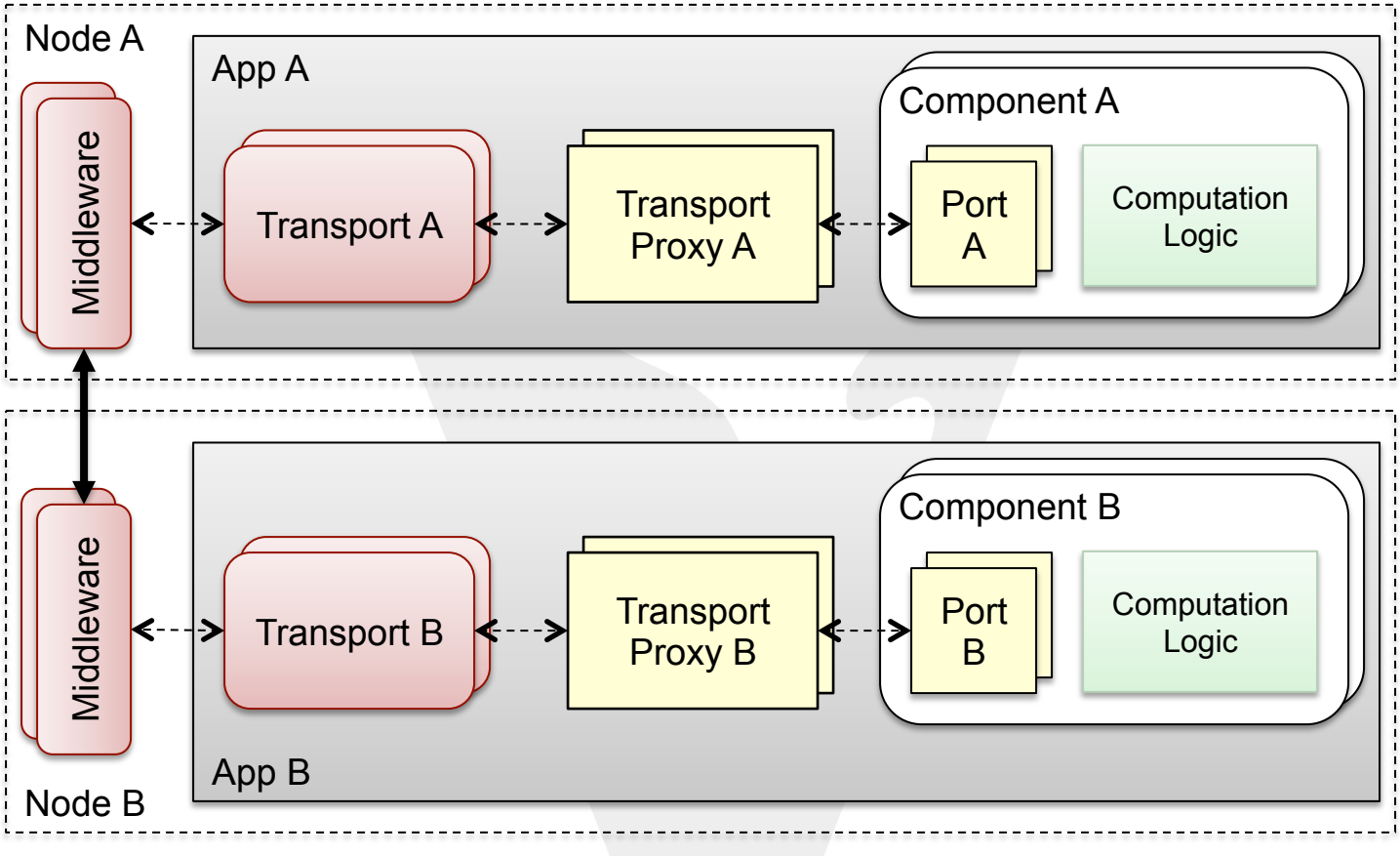

Goal-Based System Description

- A system's goal requires one or more objectives to be satisfied
- An objective requires existence of one or more functionalities, where functionalities are provided by components
  - A component provides exactly one functionality
- Dynamic representation of a system, which doesn't require systems to be described as a collection of concrete components
  - Doesn't matter which component provides a certain functionality as long as it is provided
  - Live system comprising one or more instances of different components
- Redundancy patterns can be applied to functionalities for resilience
  - Voter pattern, Consensus pattern, Simple cluster pattern

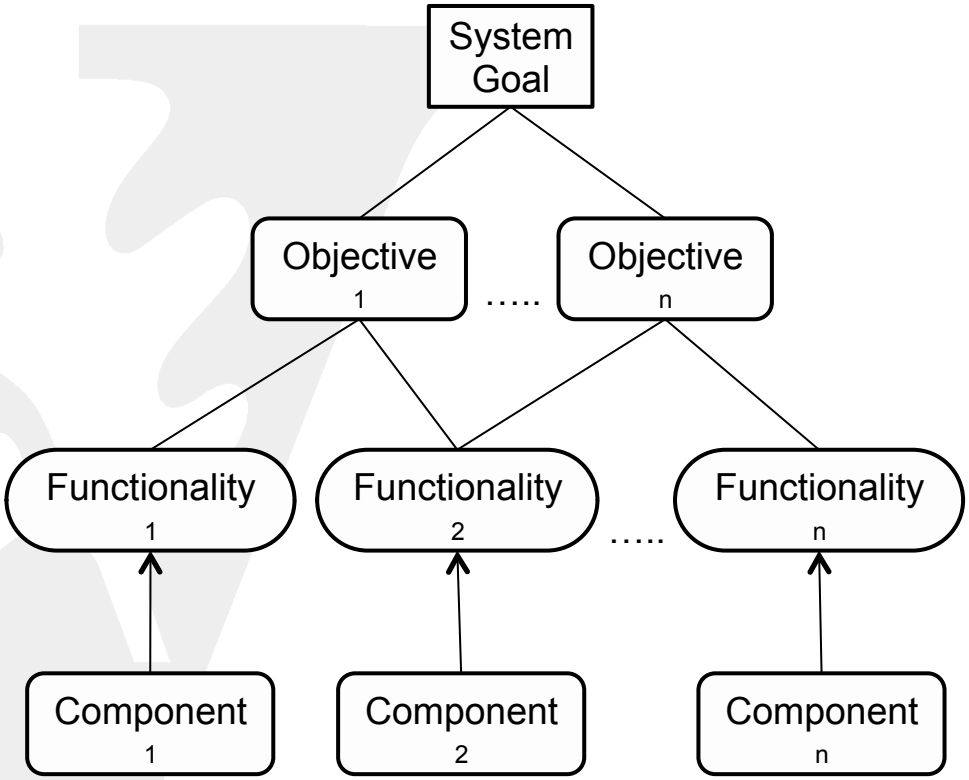

Summary

- Extensible CPS are the future of ubiquitous computing
  - Complex devices capable of interacting with their surroundings
  - E.g.: Smart city applications such as smart emergency response, smart parking, smart transportation
- Properties of extensible systems and CPS results in interesting challenges both at design-time and run-time
- Addressing heterogeneity at design-time by using generic component model that supports cleanly separated computation logic and communication logic
  - Middleware agnostic solution
- Modeling goal-based systems at design-time by encoding dynamic representation of system descriptions
  - Using well known redundancy patterns with goal-based system design